HIGH EFFICIENCY TAKEOFF

MODEL(S): 309STR, 309SG, 309STRD

309SDG, 309SGRQ

Model(s) 309STR, 309SG
(shown with 1" Tabs)

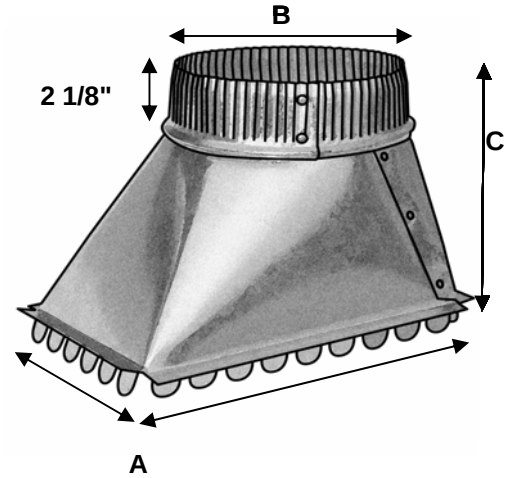

Model(s) 309STRD, 309SDG, 309SGRQ
(shown with 1" Gasketed Flange, Damper and Raised Quadrant)

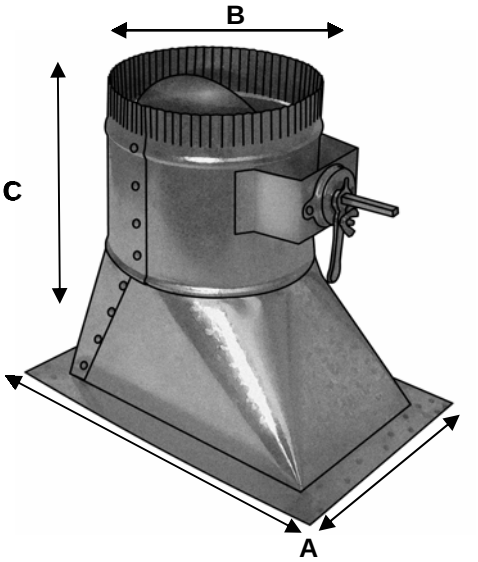

Dimensions

A Register Size	B **Collar**	C Height	C Ht. w/Damper
4" x 8"	**4"**	6 3/8"	8 1/2"
5" x 10"	**5"**	6 3/8"	8 1/2"
6" x 12"	**6"**	6 3/8"	8 1/2"
6" x 12"	**7"**	7 3/8"	9 1/2"
6" x 12"	**8"**	6 3/8"	8 1/2"
6" x 15"	**9"**	8 1/2"	11 1/4"
6 3/4" x 16"	**10"**	6 3/4"	9 1/2"
8 1/2" x 18"	**12"**	7 3/4"	10 1/2"
9 1/2" x 20"	**14"**	7 3/4"	10 1/2"
9 1/2" x 24"	**16"**	7 3/4"	10 1/2"
10 3/4" x 24	**18"**	8.75"	11 1/2"

Fabrication

Material: ASTM-A653 CS Type B
Gauge: 4" through 18" - 26GA Galvanized

Collar: Galvanized Steel with Roll Formed .25" Beading
Assembly: Assembled with 1/8" x 5/32" Zinc Coated Steel Rivets
Insulation: Takeoff to be wrapped with Fiberglass Insulation by Contractor

Available Options

Gasket: Fire Retardant Polyethylene Foam with Double Stick 3M Tape UL94 HF-1
Tabs: 1" Long - can be used with 1" - 1 1/2" Duct Board or Metal
Damper Hdw.: Available in Standard Regulator OR Raised Quadrant

Available Raised Quadrants:
Duro Dyne # 7206 ESO14R-200 1/4" Standoff Regulator for 2" wrap.
(Cost & Dimensions will change if a 2" RQ is required)
OR
Duro Dyne #7210 ESO38R-150 3/8" Standoff Regulator for 1 1/2" wrap

Model Options

Model 309STR: High Efficiency Takeoff for Metal and Duct Board
Model 309STRD: High Efficiency Takeoff with Damper for Metal and Duct Board
Model 309SG: High Efficiency Takeoff with Airtite Gasket
Model 309SDG: High Efficiency Takeoff with Airtite Gasket and Standard Regulator Damper
Model 309SGRQ: High Efficiency Takeoff with Airtite Gasket and Raised Quadrant Damper